P/N 430-01007-002
ML-P4U885GRN V2.0

PCI/ISA - UD 486 GRN

User Manual

PC Main Board

CONTENTS

Quick Setup Guide

1. Introduction 1-1

1.1. Main feature 1-1

2. Hardware configuration 2-1

2.1. CPU type configuration 2-1

2.2. System clock configuration 2-1

2.3. Cache memory configuration 2-1

2.4. On-board PCI IDE Controllor configuration 2-1

2.5. Connector pin assignment 2-2

2.5.1. Keylock connector (CN2) 2-2

2.5.2. Speaker connector (CN1) 2-2

2.5.3. Power connector (PS1) 2-2

2.5.4. Turbo switch (JP29) 2-2

2.5.5. Turbo LED (JP30) 2-2

2.5.6. Keyboard connector (KB1) 2-3

2.5.7. Reset switch (JP31) 2-3

2.5.8. Hard Disk LED (HDLED) 2-3

2.5.9. Clear CMOS (JC) 2-3

2.5.10. Other jumper introduction and default settings 2-3

3. BIOS configuration 3-1

3.1. System setup 3-1

3.2. Fixed disk setup 3-2

3.3. Advanced system setup 3-4

3.4. PCI card setup 3-6

3.5. Boot option 3-7

CONTENTS

3.6. Security and Anti-Virus 3-8

3.7. Green PC feature 3-9

3.8. Save & Exit 3-10

4. Appendix 4-1

4.1. Drive table 4-1

4.2. Board layout 4-2

Quick Setup Guide

(A) System Clock Setting for CPU

System Clock	25MHz	33MHz	40MHz	50MHz
JP18 (1-2)	OPEN	CLOSE	OPEN	CLOSE
JP18 (3-4)	OPEN	CLOSE	CLOSE	OPEN
JP18 (5-6)	OPEN	OPEN	OPEN	OPEN

(B) CPU Type Setting

	JP11	JP19	JP21	JP14	JP13	JP20	JP24	JP12	JP7	JP16	JP17
486SX	OPEN	OPEN	OPEN	OPEN	2-3	OPEN	OPEN	OPEN	CLOSE	1-2	1-2
486DX/DX2	OPEN	OPEN	OPEN	OPEN	1-2, 3-4	OPEN	OPEN	3-4	CLOSE	1-2	1-2
Intel SL 486SX/SX2	OPEN	OPEN	1-2	2-3, 4-5	2-3	1-2	OPEN	OPEN	CLOSE	1-2	1-2
Intel SL 486DX/DX2	OPEN	OPEN	1-2	2-3, 4-5	1-2, 3-4	1-2	OPEN	3-4	CLOSE	1-2	1-2
Intel 486DX4	OPEN	OPEN	1-2	2-3, 4-5	1-2, 3-4	1-2	OPEN	3-4	CLOSE	1-2	1-2
Cyrix 486SX	1-2	2-3	2-3	1-2, 3-4	2-3	1-2	2-3	OPEN	OPEN	2-3	1-2
Cyrix 486DX/DX2	1-2	2-3	2-3	1-2, 3-4	1-2, 3-4	1-2	2-3	3-4	OPEN	2-3	1-2
UMC U5S	OPEN	OPEN	OPEN	OPEN	2-3	2-3	3-4	1-2	CLOSE	1-2	2-3
AMD 486 DXL	OPEN	OPEN	OPEN	OPEN	1-2, 3-4	2-3	3-4	1-2, 3-4	CLOSE	1-2	2-3

When using AMD 3.3V 486DX2/66/80, an additional cable should add to connect JP14 Pin1 to JP9 Pin3.

(C) SIMM RAM Installaion

The Main Board provide 4x72-pin SIMM sockets for you to install flexible size of on-board memory. You can use either double-bank or single-bank SIMM according to the SIMM configuration table below.

The following Table is a typical SIMM configuration.

RAM SIZE	72-pin SIMM #1	72-pin SIMM #2	72-pin SIMM #3	72-pin SIMM #4
2 MB	1 MB x 1	1 MB x 1	---	---
4 MB	4 MB x 1	---	---	---
4 MB	---	4 MB x 1	---	---
8 MB	4 MB x 1	4 MB x 1	---	---
8 MB	---	---	8 MB x 1	---
12 MB	4 MB x 1	4 MB x 1	4 MB x 1	---
16 MB	4 MB x 1	4 MB x 1	4 MB x 1	4 MB x 1
16 MB	8 MB x 1	8 MB x 1	---	---
16 MB	16 MB x 1	---	---	---

Table continue,

RAM SIZE	72-pin SIMM #1	72-pin SIMM #2	72-pin SIMM #3	72-pin SIMM #4
32 MB	16 MB x 1	16 MB x 1	---	---
32 MB	---	---	16 MB x 1	16 MB x 1
32 MB	32 MB x 1	---	---	---
48 MB	16 MB x 1	16 MB x 1	16 MB x 1	---
64 MB	32 MB x 1	32 MB x 1	---	---
128 MB	32 MB x 1	32 MB x 1	32 MB x 1	32 MB x 1

(D) Auto configuration with ROM default

You can enter BIOS SETUP by pressing <DEL> key during power on memory test. After entered BIOS SETUP you can use arrow keys to highlight :

Load ROM Default Values

and press <Enter> key, the ROM defaults are loaded then you can save the setting to COMS and exit SETUP by pressing <F10> .The screen as shown below :

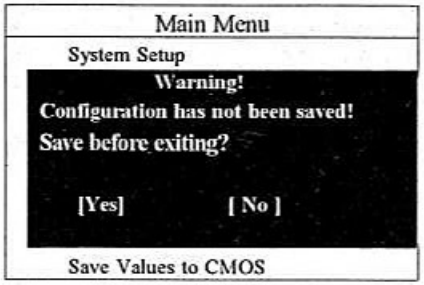

Move Enter Select
F1 Help ESC Exit F10 Save & Exit

Move the highlight cursor to [Yes] then press [Enter] to save the configuration and exit the BIOS Setup.

Note :

If you cannot successfully boot the system more than 3 times, the BIOS will show the following message :

Previous boot incomplete-Default configuration used

Press <F1> to resume, <DEL> to setup.

You can reconfigure your system by pressing <Del> to enter BIOS Setup.

1. Introduction

The manual help you to be more familiar with the system board and also serves as a guide for future system upgrading. UMC880 Main Board is a highly integrated IBM PC/AT compatible system board that support all members of 486 family, and features a WRITE BACK/WRITE THROUGH secondary cache memory from 128KB to 512KB in size. It support PCI local bus architecture, ISA bus architecture and integrate a High Performance PCI IDE Controllor on-board. This main board also support Dark Green Function (SMM mode of SMI-CPU) to allow maximum power saving.

1.1. Main Feature

CPU	–	Intel 80486SX/DX/DX2/'SL Enhanced 25/33/50/66 MHz
	–	Intel 80486DX4 75/100MHz
	–	AMD486DX/DX2/DX4 40/66/80/100MHz
	–	Cyrix Cx486DX/DX2 40/50MHz
	–	UMC U5S 33MHz
System memory	–	4 x 72pin SIMM module
	–	flexible memory size from 2MB to 128MB
Cache memory	–	Support 0/128/256/512KB secondary cache on board with either Write Back or Write through mode
On-board IDE	–	Support 4 IDE Device and Enhanced IDE Function
Green Function	–	Enter Doze mode from 15 seconds to 8 min. CPU Clock down to 1/2 of normal speed for SMI CPU or 8MHz for non-SMI CPU
	–	Enter standby mode from 2 minutes to 512 min. CPU Clock down to 1/4 of normal speed for SMI-CPU or 8MHz for non-SMI CPU and turn off screen and IDE HDD power down if set
	–	Enter suspend mode from 2 minutes to 512 min. Stop CPU clock (Only for Intel SL Enhanced & Cyrix CPU)
I/O Bus Slots	–	32-bit PCI Local Bus slot x 3
	–	8-bit XT Bus slot x 1
	–	16-bit AT Bus slot x 3
Board Size	–	220 x 220mm

2. Hardware configuration

2.1. CPU type configuration

UMC880 Main Board supports all 486 series CPU which provide an easy way to upgrade your system. When you install a different 486 CPU, you should set the jumper correctly otherwise the system will not work properly. Please refer to QUICK SETUP GUIDE section B for the correct jumper settings of different CPU type.

2.2. System clock configuration

CPU should work with proper clock frequency. The system clock frequency should not exceed the CPU maximum working frequency. Table below is the maximum working frequency of different CPU type.

CPU TYPE	486SX/25 486DX/25	486SX/33 486DX/33	486DX/40	486DX/50	486SX2/50 486DX2/50	486DX2/66	486DX4/75	486DX4/100
Sytem Clock	25MHz	33MHz	40MHz	50MHz	25MHz	33MHz	25MHz	33MHz

Please refer to QUICK SETUP GUIDE "section A" to set your System Clock correctly.

2.3. Cache memory configuration

UMC880 main board support 0KB/128KB/256KB/512KB of secondary cache memory. The secondary cache memory are consists of one of Tag SRAM and 4 of data SRAM. Table below is the jumper setting and SRAM selection of secondary cache.

CACHE RAM SIZE	TAG SRAM	DATA SRAM	LOACTION OF DATA SRAM
128KB	8K x 8	32K x 8 x 4	U(10-13)(Pin3-30)
256KB	32K x 8	64K x 8 x 4	U(10-13)
512KB	32K x 8	128K x 8 x 4	U(10-13)

CACHE RAM SIZE	JP23		JP22	JP25
	1-2	3-4		
128KB	ON	OFF	OFF	1-2
256KB	ON	ON	OFF	2-3
512KB	ON	ON	ON	2-3

2.4. On-board PCI IDE Controllor Configuration

UMC880 main board integrate an High Performance PCI IDE Controllor on-board, you can configure it through JP2 and JP3

FUCTION	JP2
Enable IDE Controllor	OPEN
Disable IDE Controllor	CLOSE

OPTION	JP3	REMARK
OPEN	Relocatable Port Address	
CLOSE	Fixed Port Address	Default Setting

2.5. Connector pin assignment

2.5.1. Key lock connector (CN2)

PIN NUMBER	FUNCTION
1	+5V
2	NC
3	GND
4	KEY LOCK
5	GND

2.5.2. Speaker connector (CN1)

PIN NUMBER	FUNCTION
1	SPKDATA
2	NC
3	GND
4	VCC

2.5.3. Power connector (PS1)

PIN NUMBER	FUNCTION
1	POWER GOOD
2	+5V(VCC)
3	+12V
4	-12V
5	GND
6	GND
7	GND
8	GND
9	-5V
10	+5V(VCC)
11	+5V(VCC)
12	+5V(VCC)

2.5.4. Turbo switch (JP29)

JP29	FUNCTION	CPU SPEED
OPEN	TURBO	HIGH
CLOSE	NON-TURBO	LOW

2.5.5. Turbo LED (JP30)

PIN NUMBER	FUNCTION
1	CATHODE
2	ANODE

2.5.6. Keyboard connector (KB1)

PIN NUMBER	FUNCTION
1	CLOCK
2	DATA
3	NC
4	GND
5	VCC

2.5.7. Reset switch (JP31)

JP31	FUNCTION
CLOSE ONCE	RESET SYSTEM
OPEN	NORMAL

2.5.8. Hard Disk LED (HDLED)

HDLED	FUNCTION
1	CATHODE
2	ANODE

2.5.9. Clear CMOS (JC)

JC	FUNCTION
Close Once	Clear Whole CMOS Setting

2.5.10. Other jumper introduction and default settings

PIN NUMBER	DEFAULT SETTING	FUNCTION	REMARK
JP15	1-2	CPU RESET SELECT	
JP10	OPEN	CPU UP#	1-2 DISABLE CPU
JP9	OPEN (3X CLK)	486DX4 CLOCK MODE	1-2 2X CLK
JP5	2-3 (EXTERNAL KC)	KEYBOARD CONTROLLER SELECT	1-2 (INTERNAL KC)
JP6	2-3 (EXTERNAL KC)	KEYBOARD CONTROLLER SELECT	1-2 (INTERNAL KC)
JP4	2-3 (EXTERNAL KC)	KEYBOARD CONTROLLER SELECT	1-2 (INTERNAL KC)
JP28	2-3 (EXTERNAL KC)	KEYBOARD CONTROLLER SELECT	1-2 (INTERNAL KC)
JP1	1-3,2-4,5-7,6-8 (EXTERNAL K.C.)	KEYBOARD CONTROLLER SELECT	7-9,8-10 (INTERNAL KC)
JP27	1-2 (EXTERNAL KC)	KEYBOARD CONTROLLER SELECT	2-3 (INTERNAL KC)
JP26	OPEN	EXTERNAL POWER MANAGEMENT INTERRUPT INPUT TO PMU	
JP8	2-3	UM8886 PTST6 Sig. Select	1-2(If 2-3 boot fail)

3. BIOS configuration

UMC880 main board provide an easy-to-use Phoenix BIOS for you to setup your system and store your system information in CMOS RAM.

When power on the computer or reset the following message appears :

Press <DEL> to enter SETUP, Then you can press <DEL> to enter BIOS SETUP main menu as shown below :

Main Menu
System Setup
Fixed Disk Setup
Advanced System Setup
Boots Options
Security and Anit-Virus
Green PC Features
Load ROM Default Values
Load Values from CMOS
Save Values to CMOS

Move Enter Select
F1 Help ESC Exit F10 Save & Exit

3.1. System setup

Use arrow keys to highlight the System Setup Selection in main menu then press <Enter> and the system setup menu will appear as show below :

System Setup	
System Time	: [4:51:52]
System Date	: [01/14/1994]
Video System	: [EGA / VGA]
System Memory	: 640 KB
Extended Memory	: 7MB
Diskette Drive A	: [Not Installed]
Diskette Drive B	: [Not Installed]

Move ESC Exit PgUp Previous Value F5 Previous Configuration
F1 Help PgDn Next Value F6 Default Configuration

System Time/Date : Use arrow keys to move the highlight cursor to the time and date that you want to modify, then use <PgUp> or <PgDn> key to modify the value.

Video System : Use arrow keys to highlight this option then use PgUp or PgDn to select the correct value.

System/Extended Memory : Auto configured by BIOS and cannot be modified.

Diskette Drive A/B : Use arrow keys to highlight this option then use PgUp or PgDn to select the correct floppy drive setting.

3.2. Fixed disk setup

Use arrow keys to highlight Fixed Disk Setup in the main menu and press <Enter> to enter fixed disk setup menu as shown below :

Fixed Disk Setup	
. IDE Adaptor 0 Master	(C:212Mb)
. IDE Adaptor 0 Slave	(None)
. IDE Adaptor 1 Master	(None)
. IDE Adaptor 1 Slave	(None)
On-board PCI-IDE Device :	[Enabled]
Large Disk Access Mode :	[DOS]

Move Enter Select
F1 Help ESC Exit F10 Save & Exit

On-board IDE Device: If you use on-board IDE connector you should set this option [Enable],and if you use other IDE adaptor you should set this option [Disable].When using on-board IDE controllor ,it is recommended that to install IDE Device Driver to enhance performance.

Install IDE Driver: Copy file QD8580.sys to your Hard Disk,then add DEVICE=QD8580.SYS to your CONFIG.SYS file

Fixed Disk Configuration: Use arrow keys to highlight the IDE Adaptor you want to configure and press <Enter> to enter the next menu as shown below:

Board Layout of UD 486 GRN V2.0

Italic character for CPU jumper setting

CPU Type	JP7	JP11	JP12	JP13	JP14	JP16	JP17	JP19	JP20	JP21	JP24
486DX/DX2	close	open	3-4	1-2,3-4	open	1-2	1-2	open	open	open	open
Intel SL DX	close	open	3-4	1-2,3-4	2-3,4-5	1-2	1-2	open	1-2	1-2	open
Cyrix DX/DX2	open	1-2	3-4	1-2,3-4	1-2,3-4	2-3	1-2	2-3	1-2	2-3	2-3
Intel DX4	close	open	3-4	1-2,3-4	2-3,4-5	1-2	1-2	open	1-2	1-2	open
UMC U5S	close	open	1-2	2-3	open	1-2	2-3	open	2-3	open	3-4

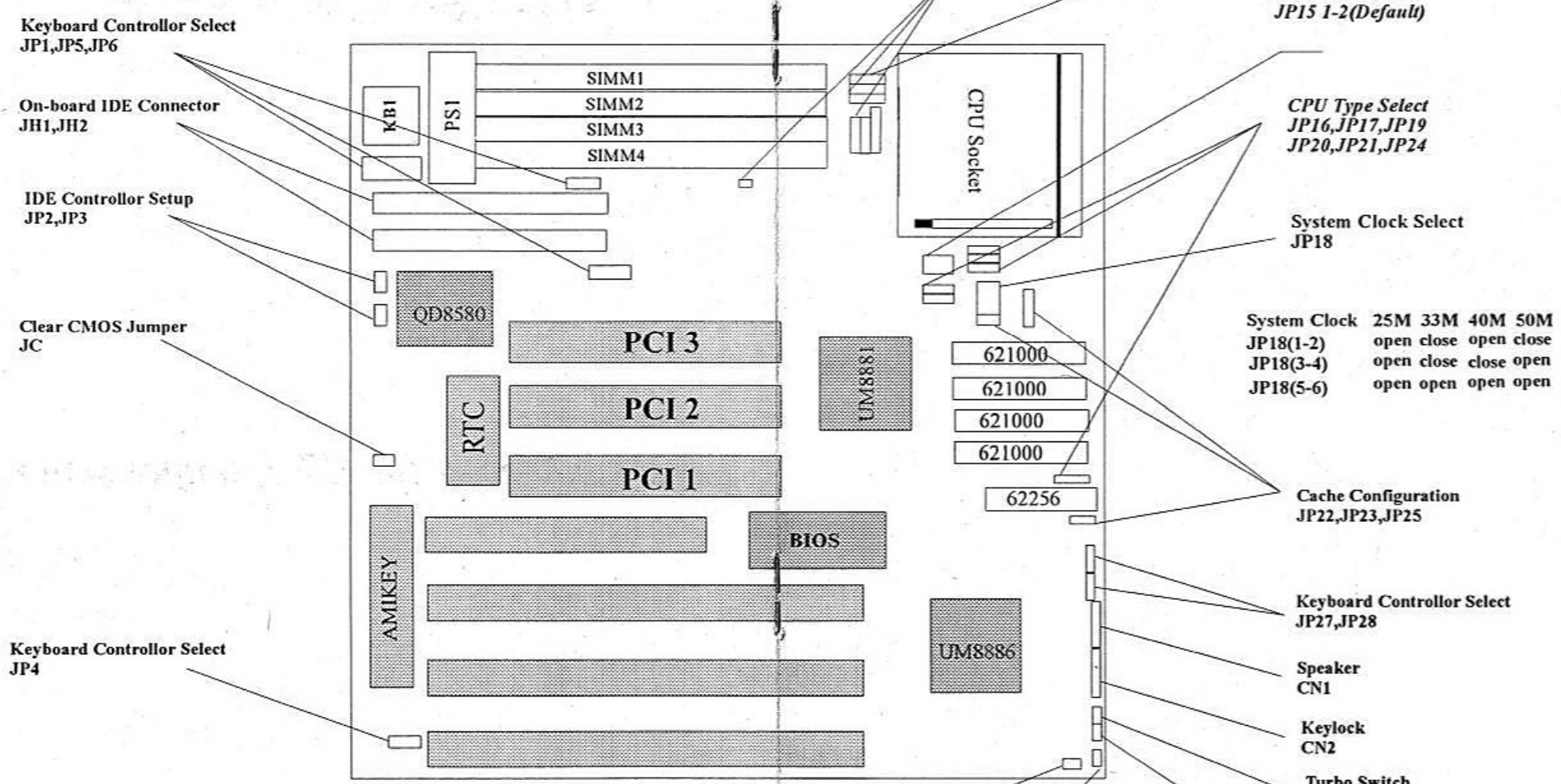

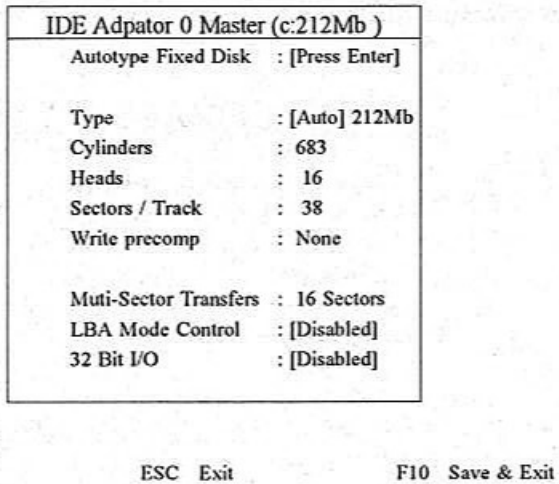

If the Type Option is set to [Auto] ,BIOS will auto detect Hard Disk during system boot. If you want BIOS to auto-detect the Hard Disk, you can highlight the Autotype Fixed Disk option then press <Enter> . You can also manually select the Hard Disk type by choosing the BIOS built-in Hard Disk Table. Use arrow key to highlight the type option and use PgUp or PgDn to select the correct HD type from BIOS HD table. If your Hard Disk has cylinder greater than 1024 then set LBA Mode Control [Enable] for the maximum use of your Hard Disk.

3.3. Advanced system setup

Use arrow key to highlight the Advanced system setup option in main menu and press <Enter> to enter the advanced system setup menu as shown below :

Advanced System Setup
Warning !
Items on this menu, if set incorrectly;
could cause your system to malfuction.
.Memory Cache
.Memory Shadow
.Advaced Chipset Control
.PCI Devices

Move ESC Exit PgUp Previous Value F5 Previous Configuration
F1 Help PgDn Next Value F6 Default Configuration

Memory Cache : To configure your memory cache using arrow keys to highlight this option and press <Enter> to enter memory cache menu as shown below :

Memory Cache	
Cache Auto Configuration	: [Enabled]
External Cache	: [Enabled]
System BIOS Cacheable	: [Disabled]
Video BIOS Cacheable	: [Disabled]
L2 Cache Write Back	: [Enabled]
Cache Speed	: 2-2-2-2
CPU Cache Policy	: [Write Back]
L2 Cache Tag Length	: 7 bit

Move ESC Exit PgUp Previous Value F5 Previous Configuration

Note :

1. If you want to re-configure the cache speed you should first set Cache Auto Configuration option to [Disable]
2. If the SRAM on-board is 15ns and system clock is below 40MHz,you can reconfigure the cache speed to 2-1-1-1 to enhance PCI VGA performance.
3. If system clock is 50MHz (Intel 486DX50) the cache speed should always be 3-2-2-2.

Memory Shadow : Use arrow keys to highlight this option in Advanced System Setup menu and press <Enter> to enter Memory Shadow submenu as shown below:

Memory Shadow	
System shadow	: Enabled
Video shadow	: [Enabled]
Shadow memory regions	
C800 - CBFF	: [Disabled]
CC00 - CFFF	: [Disabled]
D000 - D3FF	: [Disabled]
D400 - D7FF	: [Disabled]
D800 - DBFF	: [Disabled]
DC00 - DFFF	: [Disabled]

Move ESC Exit PgUp Previous Value F5 Previous Configuration
F1 Help PgDn Next Value F6 Default Configuration

Use arrow keys to select the item and use <PgUp> or <PgDn> to modify the value. To return to the previous menu press <ESC>.

Advanced Chipset Control : Use arrow keys to highligh this option in Advanced System Setup menu and press <Enter> to enter Advanced Chipset Control as shown below :

Advanced Chipset Control	
Chipset Auto Configuration	: [Enabled]
DRAM Read Wait State	: 1
DRAM Write Wait State	: 1
Resource Lock For DRAM	: [Disabled]
Residence of VGA card	: [Auto]
Host-to-PCI Wait State	: [1]
PCI Parity Check	: [Disabled]
DRAM Parity Check	: [Disabled]
LDEV# Sampling Poing	: 1 T2
PCI Item Selection	
IRQ3 Trigger	: [Edge]

Move ESC Exit PgUp Previous Value F5 Previous Configuration
F1 Help PgDn Next Value F6 Default Configuration

Note : It is recommended that DRAM Read/Write wait state should greater than or equal to 1 wait state.

PCI Devices : Use arrow keys to highlight this option in Advanced System Setup menu and press <Enter> to enter PCI Devices menu as shown below :

PCI Devices	
PCI Auto Configuration	: [Enabled]
PCI Bridge:	
(HCLK PCICLK)	: 1 1
Bus Park	: [Enabled]
Bus Lock	: [Disabled]
Keyboard Clock	: 7.16 Mhz
PCI-ISA BCLK Divider	: PCICLK/4
IO Recovery (BCLK)	: [4]
Base I/O Address	: [3000]
Base Memory Address	: [0010000000]
Multi Media Mode	: [Disabled]

Move	ESC	Exit	PgUp	Previous Value	F5	Previous Configuration
	F1	Help	PgDn	Next Value	F6	Default Configuration

The items in PCI Devices menu cannot be displayed on a single screen, you can use arrow keys to scroll the whole items and use PgUp or PgDn key to modify the value of each item. To return to the previous menu press <ESC> key.

3.4. PCI Card Setup

If you install a PCI card on PCI slot you should setup the PCI Devices according to slot number and card hardware configuration. If the PCI Card does not use any interrupt such as VGA card, it's no need to setup anything. If the PCI Card is a Slave Device with interrupt such as standard PCI IDE Card, you should follow the procedure as follow :

Step 1. Check which IRQ number your card using, for example PCI IDE using IRQ14.

Step 2. Check the PCI Slot number (Refer 4.2 Mainboard Placement) your card installed, such as slot#1.

Step 3. Use arrow key to scroll the items in PCI Device menu to highlight PCI INT# of the slot your card installed , such ad slot #1 .

Step 4. Use <PgUp> or <PgDn> key to select the IRQ value and set Enable Device option Enable.

Step 5. Double press <ESC> to return to the main menu and press <F10> to save & exit.

Step 6. Re-enter Setup and select Fixed Disk Setup menu to auto detect the IDE Hard Disk.

Note : Step 5 & 6 is only necessary for PCI IDE Card.

If the PCI card is a Master Device with Interrupt such as PCI SCSI card, you should follow the procedure below :

Step 1. Check which IRQ number your card using, for example PCI SCSI using IRQ12.

Step 2. Check the PCI Slot number (Refer 4.2 Mainboard Placement) your card installed, such as slot#1.

Step 3. Use arrow key to scroll items in PCI Device menu to highlight Enable Device of PCI Device, Slot#1 : use PgUp or PgDn key to set Enable Device & Enable Master option Enable.

Step 4. Use arrow key to highlight PCI INT# and use <PgUp> or <PgDn> key to select the IRQ value.

PCI Devices	
PCI Device, Slot #1 :	
Enable Device	: [Enable]
Enable Master	: [Enable]
PCI INTB#	: [12]
Use Default Latecy Timer Value	: [Yes]
Latecy Timer Value	: [0040]
PCI Device, Slot #2 :	
Enable Device	: [Disabled]
Enable Master	: [Disabled]
PCI INTA#	: [None]
Use Default Latecy Timer Value	: [Yes]
Latecy Timer Value	: [0040]

Move	ESC	Exit	PgUp	Previous Value	F5	Previous Configuration
	F1	Help	PgDn	Next Value	F6	Default Configuration

Step 5. Return to the main menu by pressing <ESC> then Save and Exit.

3.5. Boot Option

Use arrow keys to highlight Boot option in the main menu and press <Enter> to enter Boot option menu as shown below :

Boot Options	
Boot sequence	: [C: then A:]
SETUP Prompts	: [Enabled]
POST Errors	: [Enabled]
Floppy check	: [Disabled]
Summary Screen	: [Enabled]

Move ESC Exit PgUp Previous Value F5 Previous Configuration

Boot option menu give you the option to choose the system boot up sequence. You can use arrow keys to highlight the item then use PgUp or PgDn key to change the value. To return to the main menu press <ESC> key.

3.6. Security and Anti-Virus

Use arrow keys to highlight security and Anti-Virus in the main menu and press <Enter> to enter security and Anti-Virus menu as shown below :

Security and Anti-Virus	
Supervisor Password is	: [Disabled]
User Password is	: [Disabled]
Set Supervisor Password	: [Press Enter]
Set User Password	: [Disabled]
Password on boot	: [Disabled]
Diskette access	: [Supervisor]
Fixed disk boot sector	: [Disabled]

Move ESC Exit PgUp Previous Value F5 Previous Configuration
F1 Help PgDn Next Value F6 Default Configuration

The Phoenix BIOS give you a tight control on your computer through the setting of supervisor password and user password, if you want to set or change the password use the arrow keys to highlight set supervisor password item and press <Enter> then the screen will shown as below :

Use keyboard to enter the new password and press <Enter>, then the system will ask you to re-enter it and press <Enter>. Your new password will take effect until you save & exit setup and reboot the system. To return to the main menu press <ESC>.

3.7. Green PC feature

UMC 880 Main Board features a most efficent power saving management and support all 486 CPU for green feature (Non-SMI 486 IRQ green mode and SMI-CPU in SMM mode). In Doze mode CPU clock will slow down to 1/2 of normal speed for SMI-CPU or switch to 8MHz for normal CPU. In standby mode CPU clock will slow down to 1/4 of normal speed for SMI-CPU or keep in 8 MHz for normal CPU and the screen will be blank, hard disk will power down if set in BIOS. In suspend mode CPU will stop working for Intel SL Ehanced or Cyrix CPU while other CPU will work in their slowest state in order to save energy. In any of the 3 green mode you could wake up the system by pressing any key or a pre-set wake up event.

Use arrow keys to highlight Green PC Features and press <Enter> to enter Green PC Features menu as shown below :

Green PC Features	
Power Saving Mode	: [Disabled]
System Doze Timer	: [15 sec]
System Standby Timer	: [2 min]
System Suspend Timer	: [2 min]
Wakeup system during suspend	: [Disabled]
Wakeup time AT (hour)	: [0 hr]
Wakeup time AT (minute)	: [0 min]
VGA with Power Down feature	: [None]
Non-SMI CPU support	: [Generate IRQ10]
IDE Hard Disk Standby Timer	: [Disabled]
Advanced Power Management Setup	
System enters Doze/Standby modes by :	

Move ESC Exit PgUp Previous Value F5 Previous Configuration
F1 Help PgDn Next Value F6 Default Configuration

The items in Green PC Features menu cannot be displayed on a single screen, you can use arrow keys to scroll the whole items and use <PgUp> or <PgDn> key to modify the value of each item. To return to the previous menu press <ESC> key.

VGA with Power Down feature : If set then VGA screen will blank when entering Standby mode.

IDE Hard Disk Standby Timer : If set [Enabled] the hard disk will turn down the power when entering standby mode. (Only valid for the hard disk with green feature.)

3.8. Save & Exit

After you configured all BIOS setting, you should return to the main menu by pressing <ESC> key and save your change to CMOS RAM and reboot the system so that to make your change of configuration to take effect. To save the setting, use arrow keys to highlight Save Values to CMOS and press <Enter> or you can press <F10> and the following screen will appears as shown below then press <Y> and <Enter> to save the value and reboot the system.

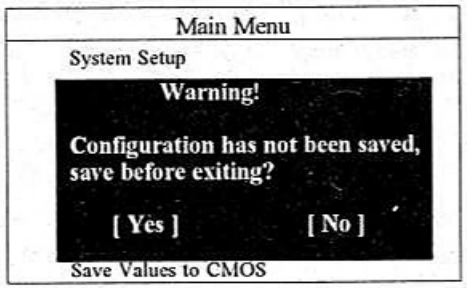

Move Enter Select
F1 Help ESC Exit F10 Save & Exit

4. Appendix

4.1. Drive table

Type	Cylinders	Heads	Write Precomp	LZ	Sector	Size
1	306	4	128	305	17	10MB
2	615	4	300	615	17	20MB
3	615	6	300	615	17	31MB
4	940	8	512	940	17	62MB
5	940	6	512	940	17	47MB
6	615	4	65535	615	17	20MB
7	462	8	256	511	17	31MB
8	733	5	65535	733	17	30MB
9	900	15	65535	901	17	112MB
10	820	3	65535	820	17	20MB
11	855	5	65535	855	17	35MB
12	855	7	65535	855	17	50MB
13	306	8	128	319	17	20MB
14	733	7	65535	733	17	43MB
15	---	---	---	---	--	---
16	612	4	0	663	17	20MB
17	977	5	300	977	17	41MB
18	977	7	65535	977	17	57MB
19	1024	7	512	1023	17	60MB
20	733	5	300	732	17	30MB
21	733	7	300	732	17	43MB
22	733	5	300	733	17	30MB
23	306	4	0	336	17	10MB
24	925	7	0	925	17	54MB
25	925	9	65535	925	17	69MB
26	754	7	754	754	17	44MB
27	754	11	65535	754	17	69MB
28	699	7	256	699	17	41MB
29	823	10	65535	823	17	68MB
30	918	7	918	918	17	53MB
31	1024	11	65535	1024	17	94MB
32	1024	15	65535	1024	17	128MB
33	1024	5	1024	1024	17	43MB
34	612	2	128	612	17	10MB
35	1024	9	65535	1024	17	77MB
36	1024	8	512	1024	17	68MB
37	615	8	128	615	17	41MB
38	987	3	987	987	17	25MB
39	987	7	987	987	17	57MB
40	820	6	820	820	17	41MB
41	977	5	977	977	17	41MB
42	981	5	981	981	17	41MB
43	830	7	512	830	17	48MB
44	830	10	65535	830	17	69MB
45	917	15	65535	918	17	114MB
46	1224	15	65535	1223	17	152MB
47	---	---	---	---	---	---

4.2. Board layout

Italic characters for CPU jumper settings

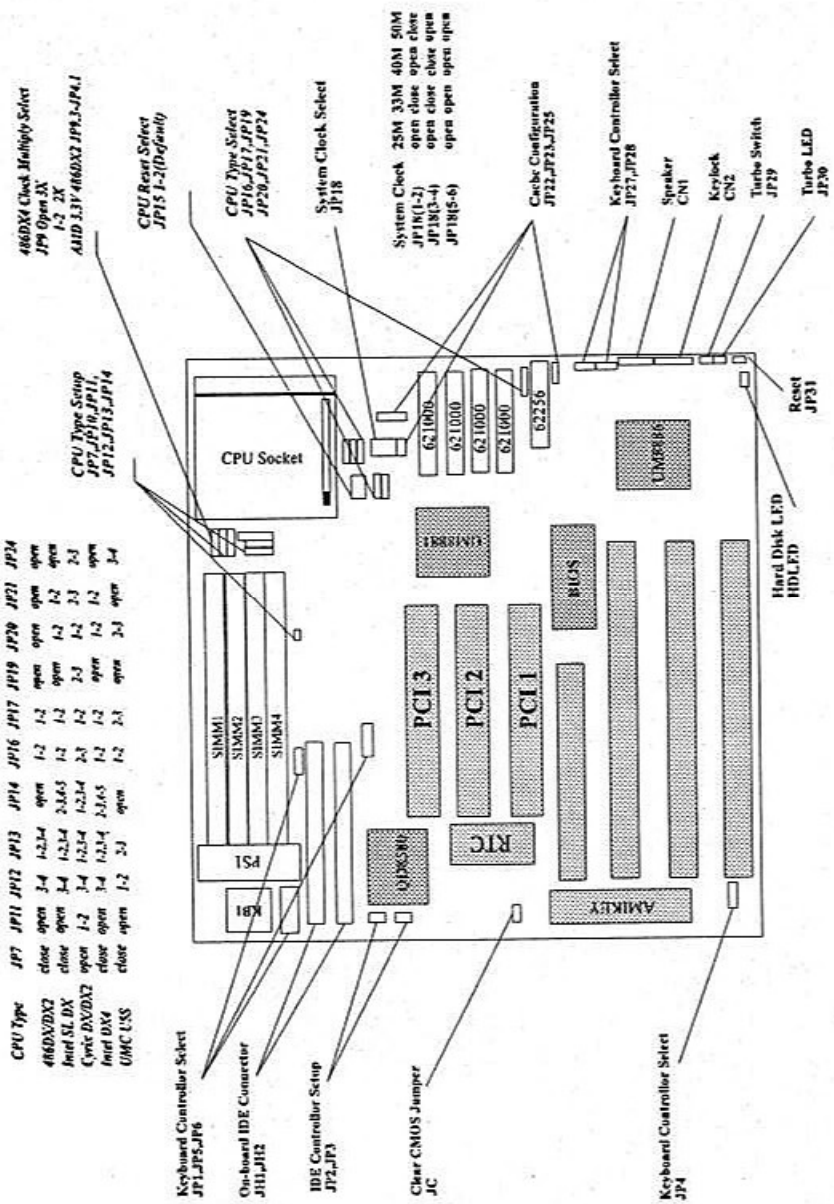

CPU Type	JP7	JP11	JP12	JP13	JP14	JP16	JP17	JP19	JP20	JP21	JP24
4860X/DX2	close	open	3-4	1-2,3-4	open	1-2	1-2	open	open	open	open
Intel SL DX	close	open	3-4	1-2,3-4	2-3,4-5	1-2	1-2	open	1-2	1-2	open
Cyrix DX/DX2	open	1-2	3-4	1-2,5-6	1-2,3-4	2-3	1-2	2-3	1-2	2-3	2-3
Intel DX4	close	open	3-4	1-2,5-6	3-4,4-5	1-2	1-2	open	1-2	1-2	open
UMC US5	close	open	1-2	2-3	open	1-2	2-3	open	2-3	open	3-4