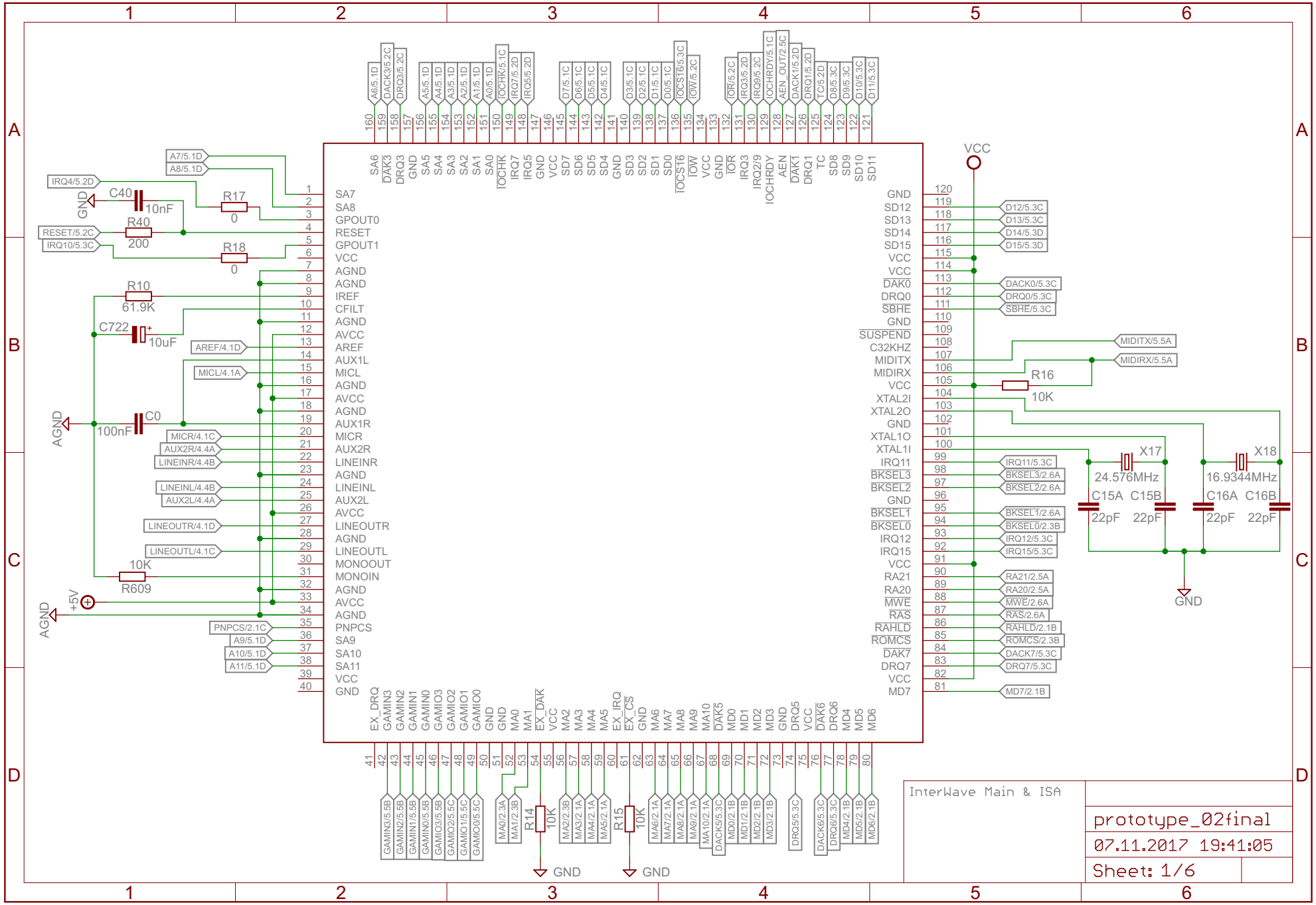
InterWave Main & ISA
prototype_02final
07.11.2017 19:41:05
Sheet: 1/6
VCC
GND
AGND
+5V
C40 10nF
R17 0
R40 200
R18 0
R10 61.9K
C722 10uF
C0 100nF
R609 10K
R16 10K
X17 24.576MHz
X18 16.9344MHz
C15A C15B C16A C16B
22pF 22pF 22pF 22pF
R14 10K
R15 10K

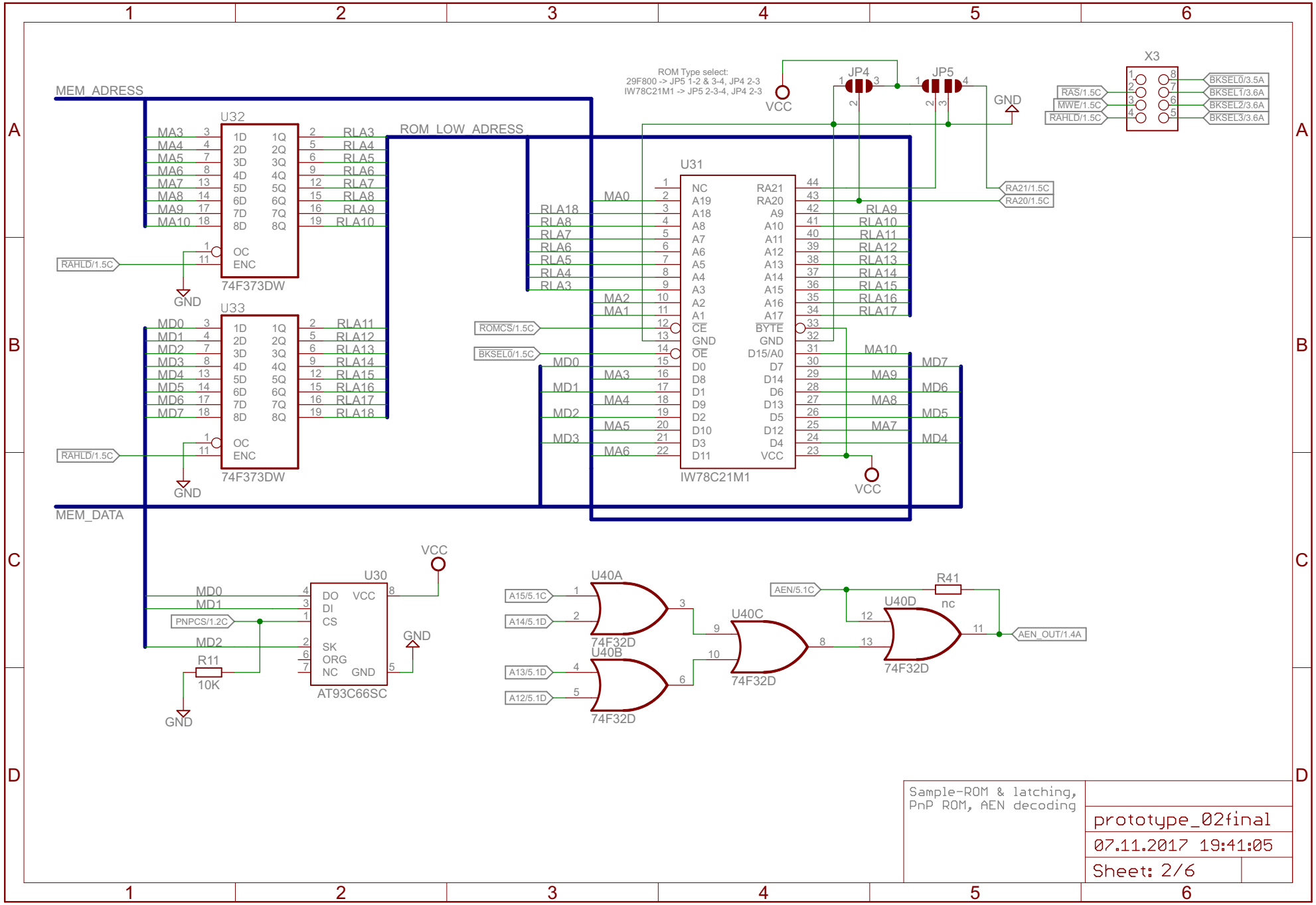
MEM_ADRESS
ROM_LOW_ADRESS
MEM_DATA
U32
74F373DW
U33
74F373DW
U31
IW78C21M1
ROM Type select:
29F800 -> JP5 1-2 & 3-4, JP4 2-3
IW78C21M1 -> JP5 2-3-4, JP4 2-3
JP4
JP5
VCC
GND
X3
RAS/1.5C
MWE/1.5C
RAHLD/1.5C
BKSEL0/3.5A
BKSEL1/3.6A
BKSEL2/3.6A
BKSEL3/3.6A
RA21/1.5C
RA20/1.5C
ROMCS/1.5C
BKSEL0/1.5C
U30
AT93C66SC
PNPCS/1.2C
R11
10K
U40A
U40B
U40C
U40D
74F32D
A15/5.1C
A14/5.1D
A13/5.1D
A12/5.1D
AEN/5.1C
R41
nc
AEN_OUT/1.4A
Sample-ROM & latching,
PnP ROM, AEN decoding
prototype_02final
07.11.2017 19:41:05
Sheet: 2/6

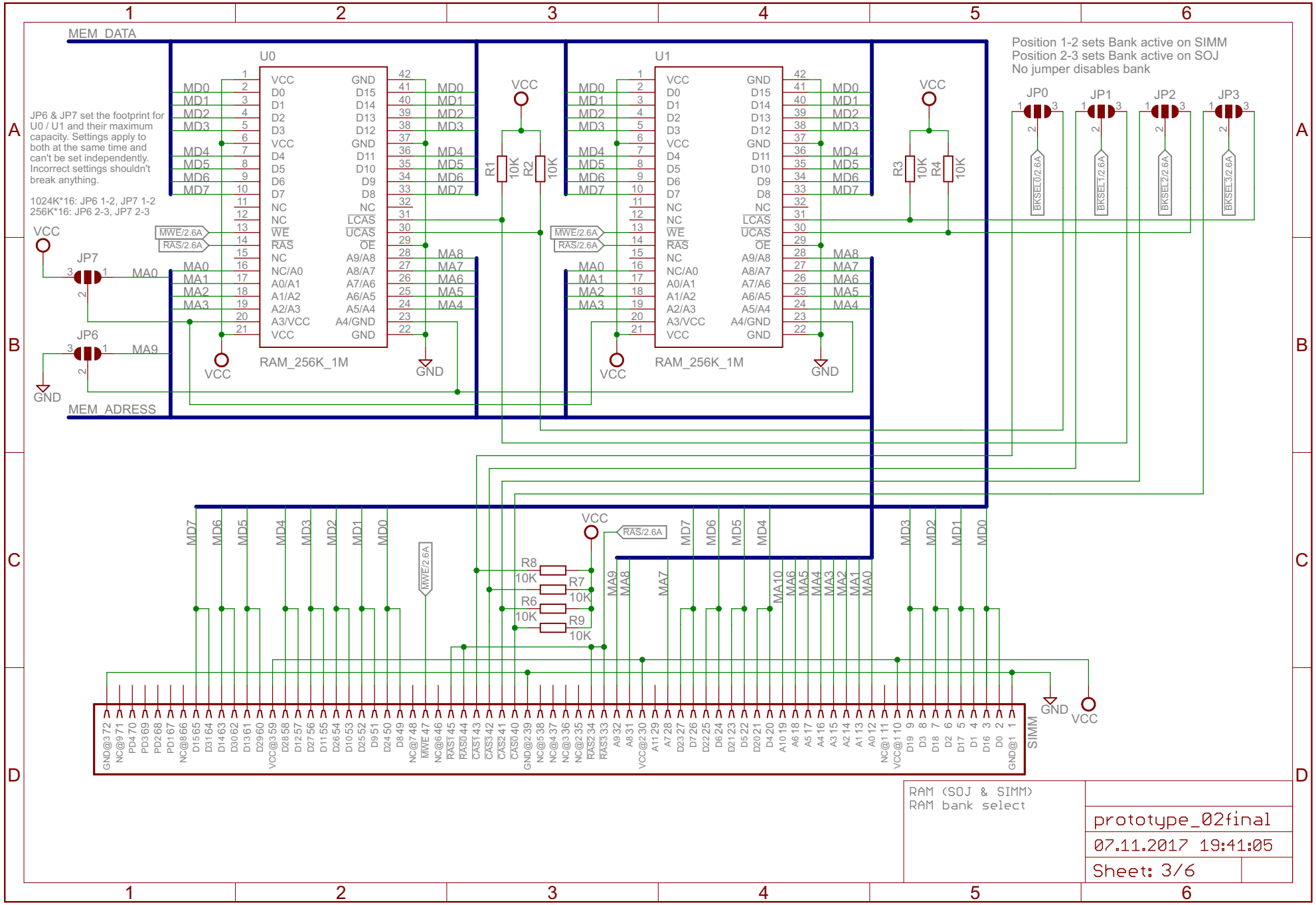
MEM_DATA
MEM_ADRESS
U0
U1
RAM_256K_1M
JP6 & JP7 set the footprint for U0 / U1 and their maximum capacity. Settings apply to both at the same time and can't be set independently. Incorrect settings shouldn't break anything.
1024K*16: JP6 1-2, JP7 1-2
256K*16: JP6 2-3, JP7 2-3
Position 1-2 sets Bank active on SIMM
Position 2-3 sets Bank active on SOJ
No jumper disables bank
JP0
JP1
JP2
JP3
JP7
JP6
BKSEL0/2.6A
BKSEL1/2.6A
BKSEL2/2.6A
BKSEL3/2.6A
MWE/2.6A
RAS/2.6A
VCC
GND
R1 10K
R2 10K
R3 10K
R4 10K
R6 10K
R7 10K
R8 10K
R9 10K
SIMM
RAM (SOJ & SIMM)
RAM bank select
prototype_02final
07.11.2017 19:41:05
Sheet: 3/6

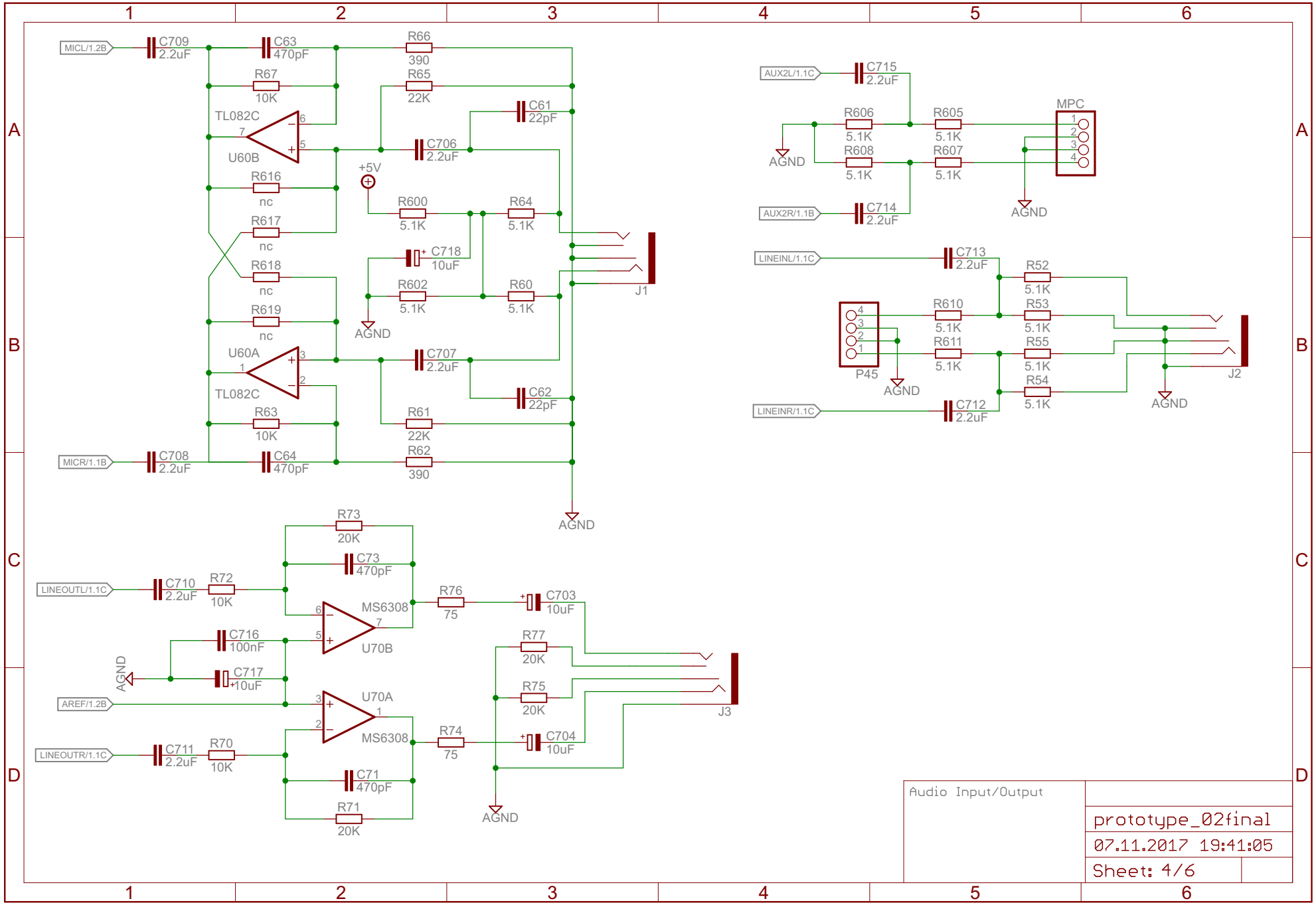
MICL/1.2B
C709 2.2uF
C63 470pF
R66 390
R67 10K
R65 22K
TL082C
U60B
C61 22pF
C706 2.2uF
+5V
R616 nc
R600 5.1K
R64 5.1K
R617 nc
C718 10uF
R618 nc
R602 5.1K
R60 5.1K
J1
R619 nc
AGND
U60A
C707 2.2uF
TL082C
C62 22pF
R63 10K
R61 22K
MICR/1.1B
C708 2.2uF
C64 470pF
R62 390
AGND
AUX2L/1.1C
C715 2.2uF
R606 5.1K
R605 5.1K
MPC
AGND
R608 5.1K
R607 5.1K
AUX2R/1.1B
C714 2.2uF
AGND
LINEINL/1.1C
C713 2.2uF
R52 5.1K
R610 5.1K
R53 5.1K
P45
R611 5.1K
R55 5.1K
J2
AGND
R54 5.1K
AGND
LINEINR/1.1C
C712 2.2uF
R73 20K
C73 470pF
LINEOUTL/1.1C
C710 2.2uF
R72 10K
MS6308
R76 75
C703 10uF
U70B
C716 100nF
R77 20K
AGND
C717 10uF
R75 20K
AREF/1.2B
U70A
J3
MS6308
R74 75
C704 10uF
LINEOUTR/1.1C
C711 2.2uF
R70 10K
C71 470pF
R71 20K
AGND
Audio Input/Output
prototype_02final
07.11.2017 19:41:05
Sheet: 4/6

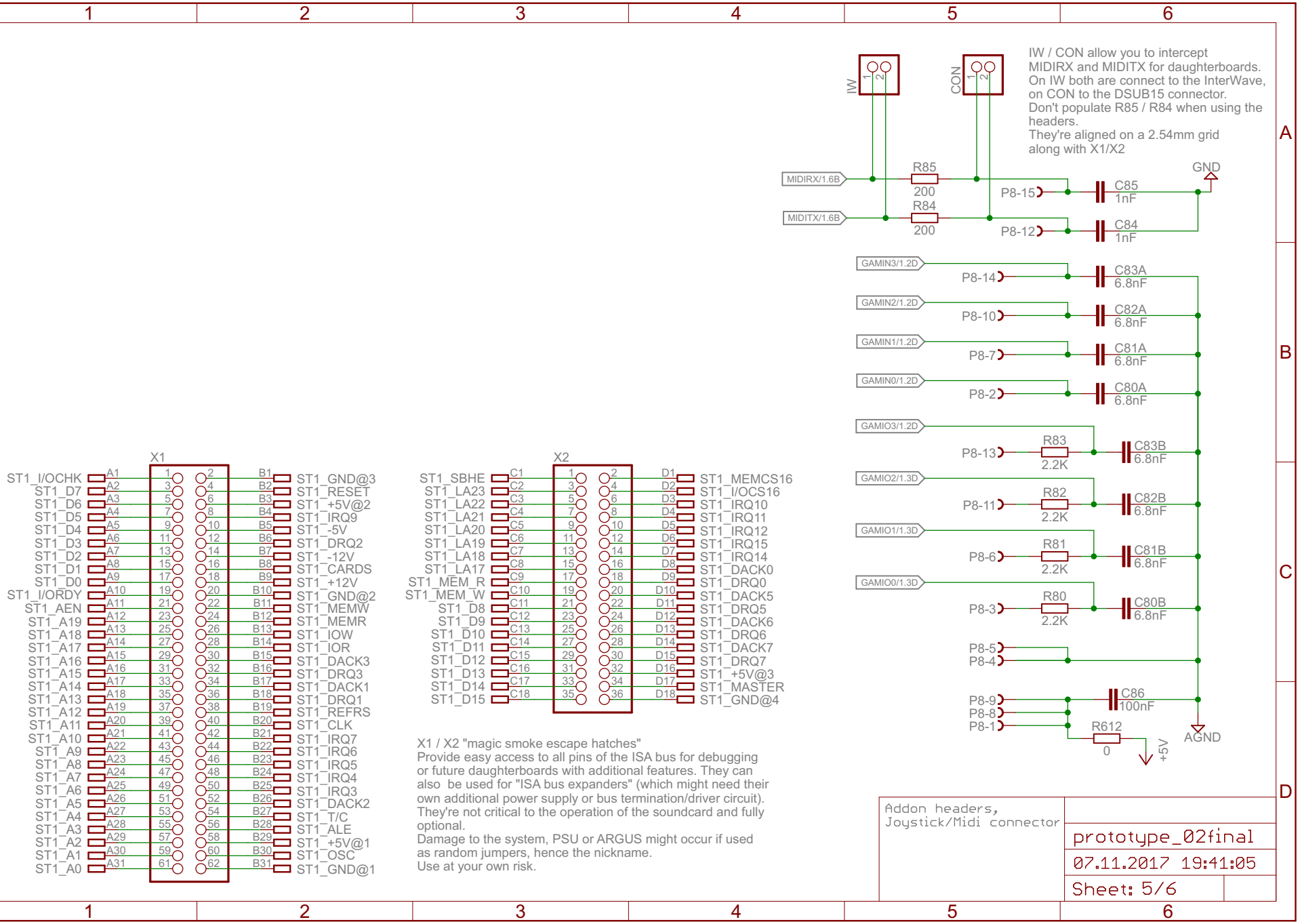
IW / CON allow you to intercept MIDIRX and MIDITX for daughterboards. On IW both are connect to the InterWave, on CON to the DSUB15 connector. Don't populate R85 / R84 when using the headers. They're aligned on a 2.54mm grid along with X1/X2
IW
CON
MIDIRX/1.6B
MIDITX/1.6B
R85 200
R84 200
P8-15
P8-12
C85 1nF
C84 1nF
GND
GAMIN3/1.2D
GAMIN2/1.2D
GAMIN1/1.2D
GAMIN0/1.2D
P8-14
P8-10
P8-7
P8-2
C83A 6.8nF
C82A 6.8nF
C81A 6.8nF
C80A 6.8nF
GAMIO3/1.2D
GAMIO2/1.3D
GAMIO1/1.3D
GAMIO0/1.3D
P8-13
P8-11
P8-6
P8-3
R83 2.2K
R82 2.2K
R81 2.2K
R80 2.2K
C83B 6.8nF
C82B 6.8nF
C81B 6.8nF
C80B 6.8nF
P8-5
P8-4
P8-9
P8-8
P8-1
C86 100nF
R612 0
+5V
AGND
X1
ST1_I/OCHK A1 1 2 B1 ST1_GND@3
ST1_D7 A2 3 4 B2 ST1_RESET
ST1_D6 A3 5 6 B3 ST1_+5V@2
ST1_D5 A4 7 8 B4 ST1_IRQ9
ST1_D4 A5 9 10 B5 ST1_-5V
ST1_D3 A6 11 12 B6 ST1_DRQ2
ST1_D2 A7 13 14 B7 ST1_-12V
ST1_D1 A8 15 16 B8 ST1_CARDS
ST1_D0 A9 17 18 B9 ST1_+12V
ST1_I/ORDY A10 19 20 B10 ST1_GND@2
ST1_AEN A11 21 22 B11 ST1_MEMW
ST1_A19 A12 23 24 B12 ST1_MEMR
ST1_A18 A13 25 26 B13 ST1_IOW
ST1_A17 A14 27 28 B14 ST1_IOR
ST1_A16 A15 29 30 B15 ST1_DACK3
ST1_A15 A16 31 32 B16 ST1_DRQ3
ST1_A14 A17 33 34 B17 ST1_DACK1
ST1_A13 A18 35 36 B18 ST1_DRQ1
ST1_A12 A19 37 38 B19 ST1_REFRS
ST1_A11 A20 39 40 B20 ST1_CLK
ST1_A10 A21 41 42 B21 ST1_IRQ7
ST1_A9 A22 43 44 B22 ST1_IRQ6
ST1_A8 A23 45 46 B23 ST1_IRQ5
ST1_A7 A24 47 48 B24 ST1_IRQ4
ST1_A6 A25 49 50 B25 ST1_IRQ3
ST1_A5 A26 51 52 B26 ST1_DACK2
ST1_A4 A27 53 54 B27 ST1_T/C
ST1_A3 A28 55 56 B28 ST1_ALE
ST1_A2 A29 57 58 B29 ST1_+5V@1
ST1_A1 A30 59 60 B30 ST1_OSC
ST1_A0 A31 61 62 B31 ST1_GND@1
X2
ST1_SBHE C1 1 2 D1 ST1_MEMCS16
ST1_LA23 C2 3 4 D2 ST1_I/OCS16
ST1_LA22 C3 5 6 D3 ST1_IRQ10
ST1_LA21 C4 7 8 D4 ST1_IRQ11
ST1_LA20 C5 9 10 D5 ST1_IRQ12
ST1_LA19 C6 11 12 D6 ST1_IRQ15
ST1_LA18 C7 13 14 D7 ST1_IRQ14
ST1_LA17 C8 15 16 D8 ST1_DACK0
ST1_MEM_R C9 17 18 D9 ST1_DRQ0
ST1_MEM_W C10 19 20 D10 ST1_DACK5
ST1_D8 C11 21 22 D11 ST1_DRQ5
ST1_D9 C12 23 24 D12 ST1_DACK6
ST1_D10 C13 25 26 D13 ST1_DRQ6
ST1_D11 C14 27 28 D14 ST1_DACK7
ST1_D12 C15 29 30 D15 ST1_DRQ7
ST1_D13 C16 31 32 D16 ST1_+5V@3
ST1_D14 C17 33 34 D17 ST1_MASTER
ST1_D15 C18 35 36 D18 ST1_GND@4
X1 / X2 "magic smoke escape hatches"
Provide easy access to all pins of the ISA bus for debugging or future daughterboards with additional features. They can also be used for "ISA bus expanders" (which might need their own additional power supply or bus termination/driver circuit).
They're not critical to the operation of the soundcard and fully optional.
Damage to the system, PSU or ARGUS might occur if used as random jumpers, hence the nickname.
Use at your own risk.
Addon headers, Joystick/Midi connector
prototype_02final
07.11.2017 19:41:05
Sheet: 5/6

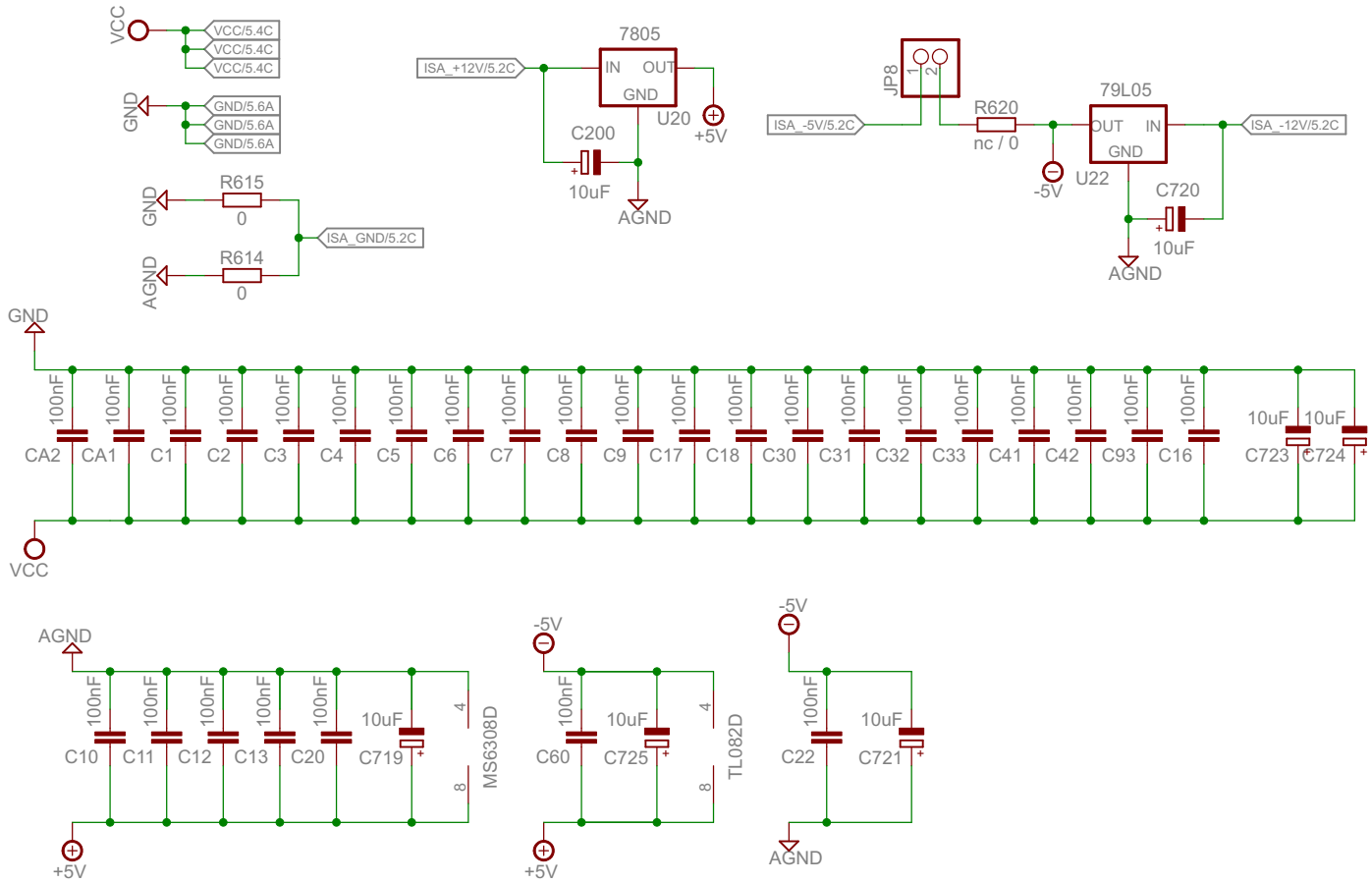

Word of warning regarding the -5V option (JP6/R620):
When used the TL082D amplifier and ISA bus share the same -5V source, which might lead to unclean sound reproduction (the TL082D consumes <100mA, leaving roughly 900mA for the ISA bus in a typical configuration). Also if your PSU already supplies this voltage you're in for a bad time, potentially endangering your PSU, mainboard and ARGUS. You will have to dimension R620 according to your expected power consumption (a 1/8W resistor will likely act as a fuse/burn off when overpowered).
It's strongly recommended to not use this feature (leave JP6 and R620 unpopulated) and patch your cards/PSU in case they need -5V on the ISA bus. Be extremely careful when using this feature and swapping cards between systems.
Use at your own risk.

Supply / decoupling	
	prototype_02final
	07.11.2017 19:41:05
	Sheet: 6/6